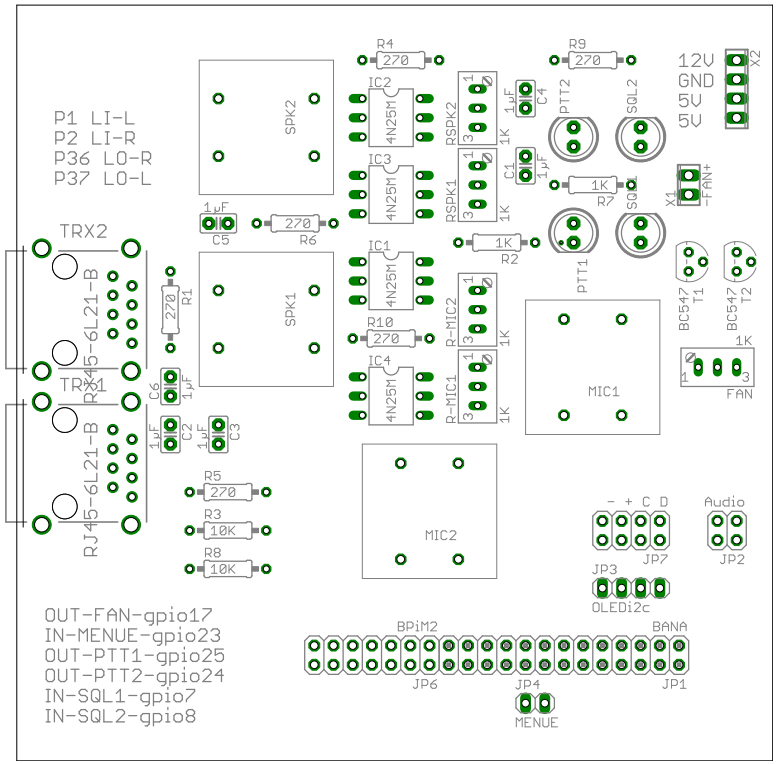

14.12.15 12:15 /Users/skyandy/Documents/eagle/ELPTTI/Elenata/elenata.brd